innodisk

APPLIED INTELLIGENCE



ENTERPRISE SSD & AI MEMORY

UNLOCK SCALE PERFORMANCE ACROSS DATA CENTERS

Data centers and cloud servers face I/O bottlenecks, growing data capacity demands, and memory constraints. Innodisk addresses these challenges with advance enterprise SSD, DDR5, and CXL memory solutions—from reliable boot drives and high-speed local storage to scalable memory expansion—helping improve uptime, sustain performance, and scale AI infrastructure efficiently.

Sustained Performance

Firmware Customization

Long-Term Availability

BUILD AROUND YOUR STORAGE ARCHITECTURE

SERVER RACK



DATA CENTER SERVER

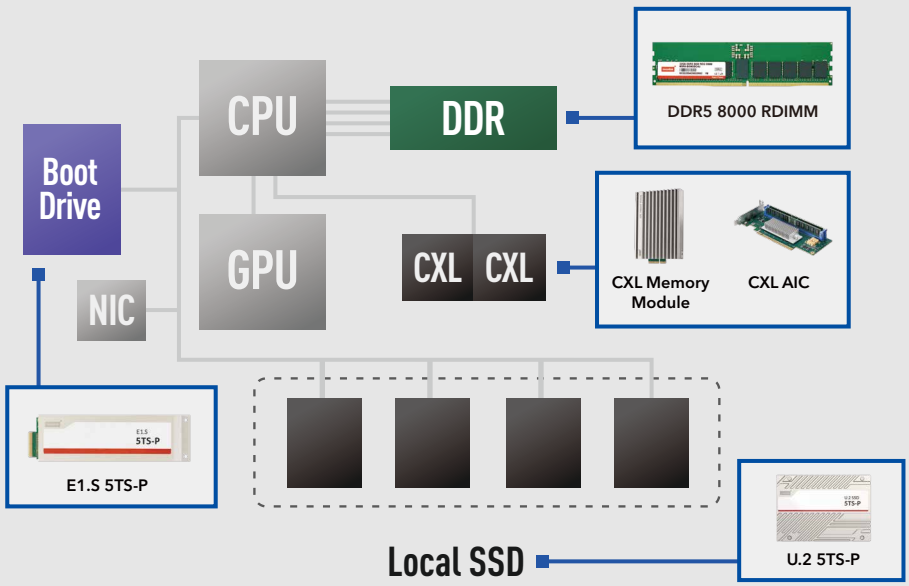

BOOT DRIVE

Ensure reliable server startup with PLP, consistent low-queue-depth performance, 1 DWPD endurance, and built-in health and thermal management for 24/7 operation.



PCIe Gen5
5TS-P Series



PCIe Gen4 (4TS2-P / 4TS3-P)



SATA III (3TS9-P Series)

LOCAL STORAGE

Accelerate server-local storage with high-throughput, high-IOPS NVMe SSDs that reduce I/O bottlenecks across data staging, caching, checkpointing, and other data-intensive workloads.



PCIe Gen5
5TS-P Series



PCIe Gen4
4TS2-P / 4TS3-P

AI MEMORY

Scale memory capacity and bandwidth for your AI workloads with CXL, DDR5 MRDIMM, and RDIMM. Allocate pooled CXL memory across hosts as demand shifts, reducing stranded capacity.



CXL Module



CXL AIC



DDR5 MRDIMM



DDR5 RDIMM

WHY INNODISK ?



Sustained Performance

- SSD | Server-Class Performance
- DRAM | High-Bandwidth DDR5 Memory
- DRAM | Scalable CXL expansion & pooling



Data Protection & Manageability

- SSD | iCell Power-Loss Protection
- SSD | AES & TCG Opal 2.0 support
- SSD | Remote Monitoring, NVMe-MI
- DRAM | ECC, TVS & eFuse protection

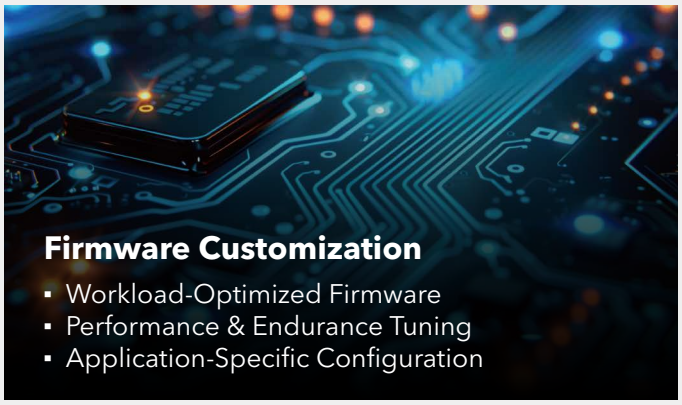

Firmware Customization

- Workload-Optimized Firmware
- Performance & Endurance Tuning
- Application-Specific Configuration

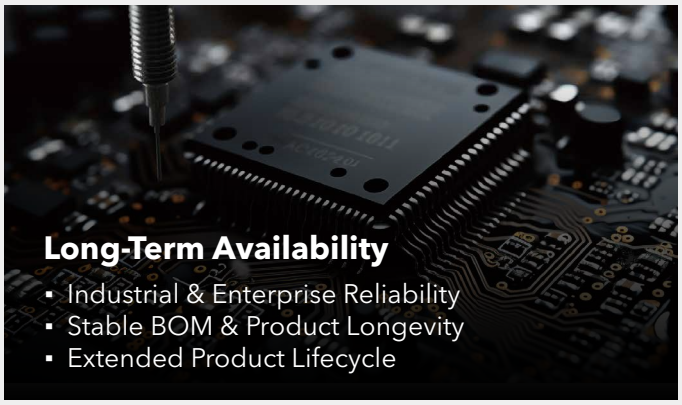

Long-Term Availability

- Industrial & Enterprise Reliability
- Stable BOM & Product Longevity
- Extended Product Lifecycle

HIGHLIGHT PRODUCTS ENTERPRISE SSD SERIES

Built for high performance, data-intensive server workloads



Model	PCIe 5TS-P / 5QS-P Series
Form Factors	U.2, E1.S, E3.S
Seq. R/W (GB/s, max.)	14 / 10
DWPD	1
Capacity*	1.9TB ~ 15.36TB*
Warranty	5 Years
Application	Mainstream (eTLC)

*15.36TB Coming Soon.

3D eTLC / NVMe 2.0 | OCP DSSD v2.0 | End-to-End Data Protection | Thermal Management

READY FOR NEXT-GENERATION WORKLOADS



Overview

Dedicated boot SSDs are critical to AI compute node availability, but internal M.2 drives can be difficult to cool and service in dense liquid-cooled systems, increasing downtime risk.

Solution

Innodisk E1.S 5TS-P PCIe Gen5 SSDs

- EDSFF design (OCP accepted)
- iCell power-loss protection
- Workload-optimized firmware
- Remote monitoring & OOB management

OCP ACCEPTED

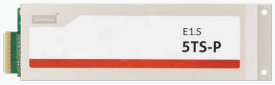



Overview

High-performance local NVMe storage keeps AI models close to compute resources, reducing load times and preventing storage bottlenecks that leave GPUs waiting for data.

Solution

Innodisk U.2 5TS-P PCIe Gen5 SSDs

- Up to 14 GB/s read and 10 GB/s write
- AES & TCG Opal 2.0 data security
- Innodisk iCell power-loss protection
- SSD remote monitoring & OOB management

OCP ACCEPTED



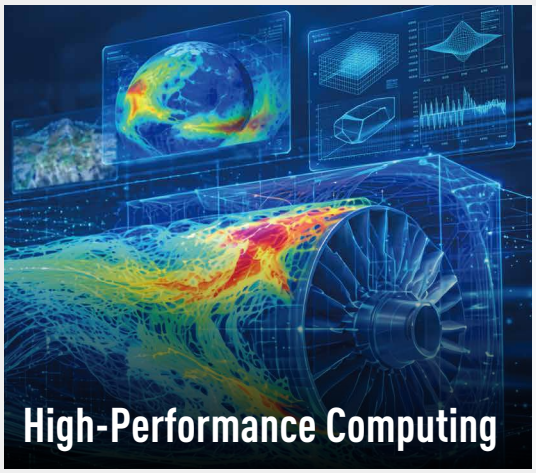

Overview

Scalable memory helps HPC systems overcome the memory wall by expanding capacity and improving data access across compute-intensive workloads

Solution

Innodisk CXL Memory Module

- Memory Pooling for flexible resource allocation
- Expanding memory without extra DIMM slots
- Reduced latency and complexity via CXL.mem



TAIWAN EXCELLENCE

EXPLORE MORE SOLUTIONS

ASK AN EXPERT TODAY

ABOUT INNODISK

Founded in 2005, Innodisk is a global leader in industrial memory and storage, now advancing into edge AI. From reliable storage to intelligent edge solutions, we empower real-time data, computing, and decision-making to help architect a more intelligent world.

innodisk

T +886-2-7703-3000 **F** +886-2-7703-3555 **E** sales@innodisk.com

Copyright © 2026 Nov. Innodisk Corporation. All rights reserved.